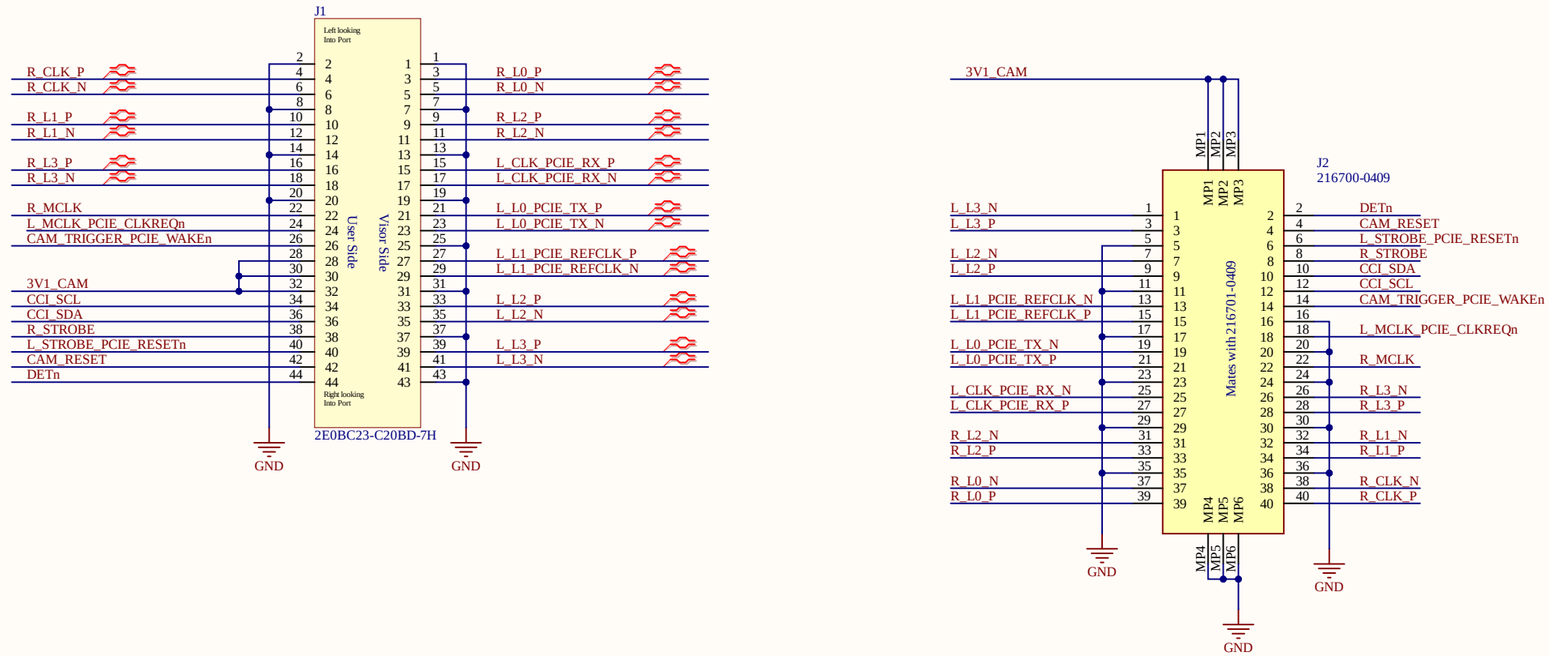

Title		
Size Tabloid	Number	Revision
Date: 12/24/2025		Sheet of
File: C:\dev2\..\Front_Port_Breakout.SchDoc		Drawn By: